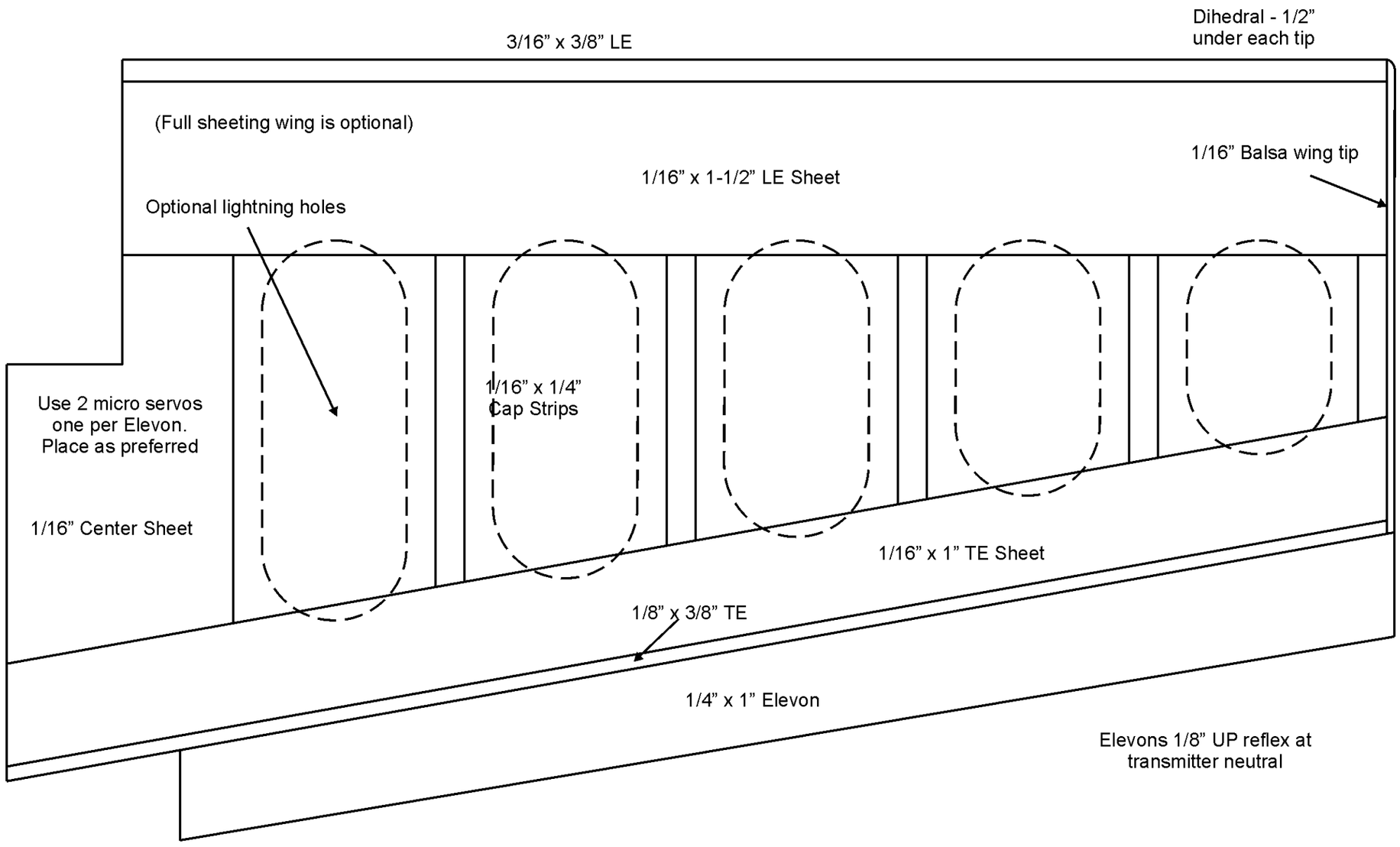

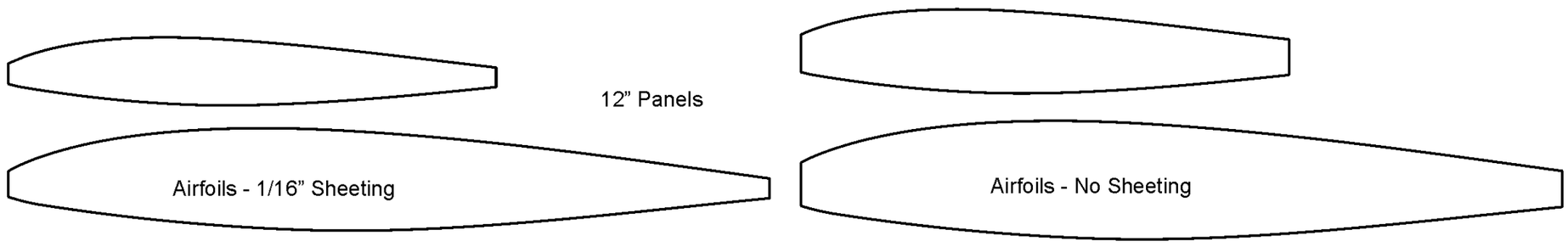

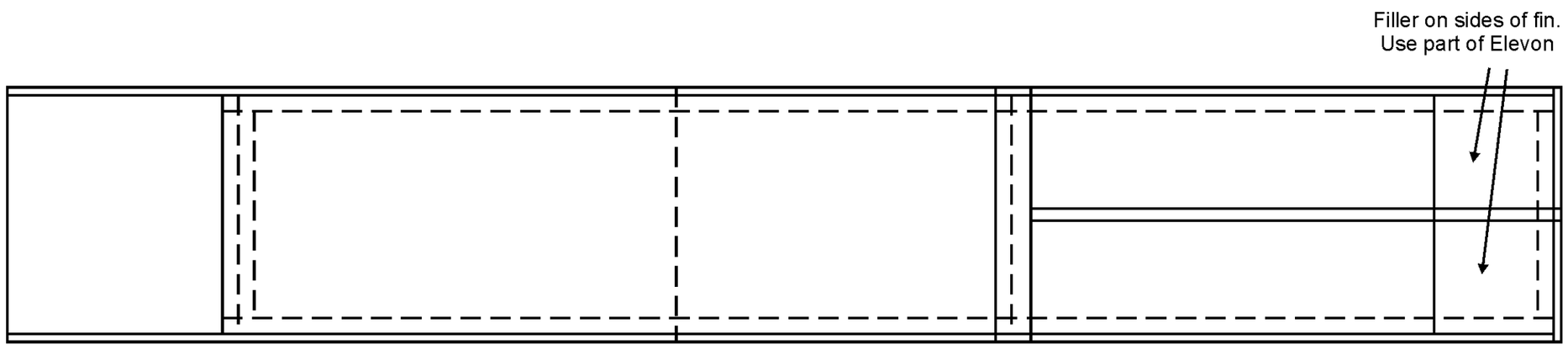

BUG’S EAR
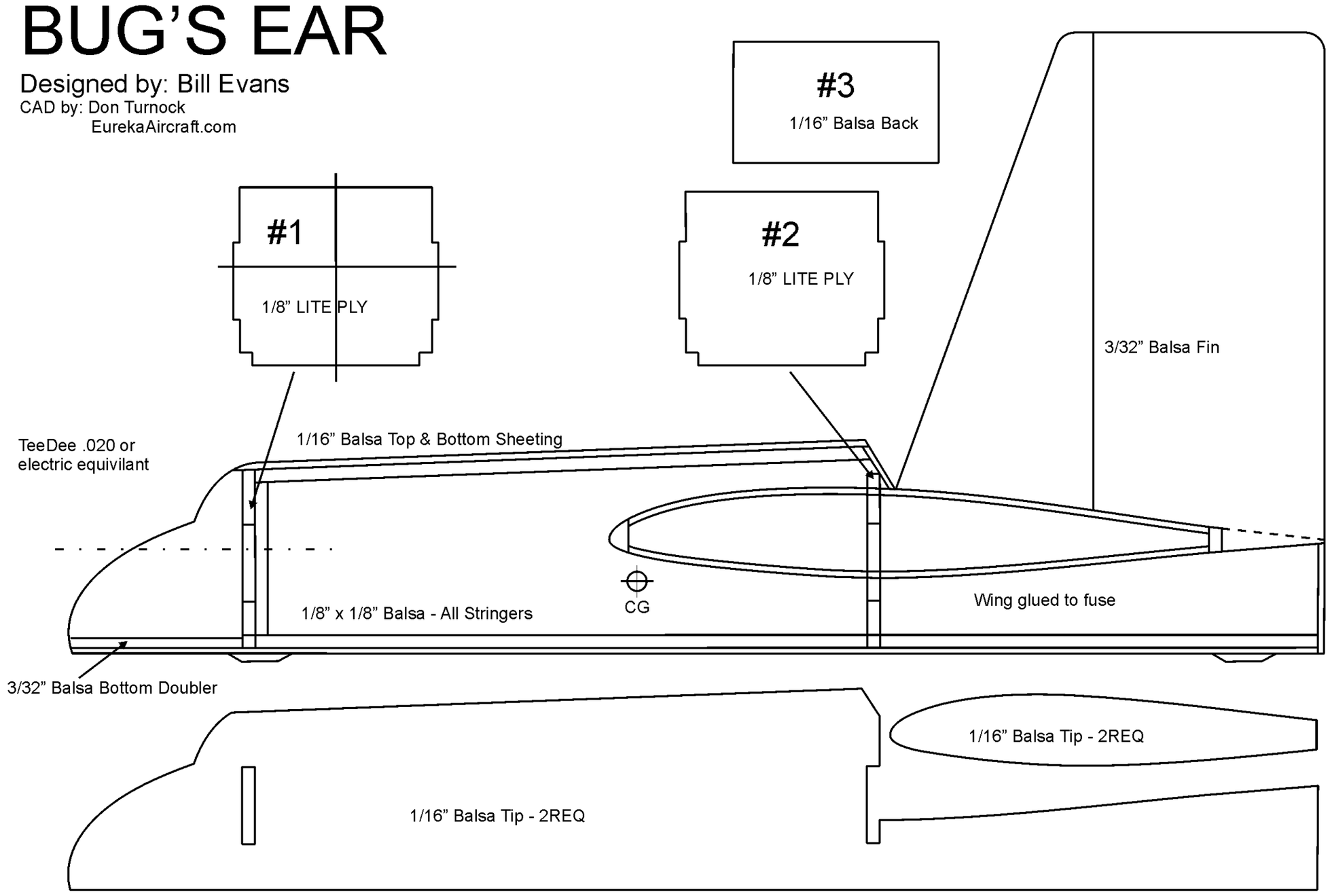
Designed by: Bill Evans
CAD by: Don Turnock
EurekaAircraft.com